/201

جامعة أسيوط - كلية العلوم

إدارة المكتبات

امتحانات

الفصل الدراسي الصيفى

للعام الجامعي

٢٠١٦-٢٠١٧م

قسم الفيزياء



الفرق الهامة

Assiut University **Faculty of Science** **Department of Physics**	**Term: Fall 2017- 2018** **Date : 2017 /8 /21** **Time : 2 hours**
Course Title: General Physics (2) - Code: P105 - Final Examination (50 %)	
Instructor : Dr. A. A. Ebrahim	
Constants: Electron charge e = -1.6×10^{-19} C, Electron mass m = 9.1×10^{-31} kg, $K_e = 9\times10^9\ Nm^2/C^2$, $\varepsilon_0 = 8.85\times10^{-12}\ C^2/Nm^2$	

Part I: Circle the correct answer for (8) only of the following questions: (25 Marks)

1. Which of the following is **NOT** a unit of electric field?
   - **a.** N/C
   - **b.** V/m
   - **c.** J/C . m
   - **d.** V . m/C

2. Two charged particles, $Q_1 = +2\,\mu C$ and $Q_2 = +6\,\mu C$, are a distance r apart. $\underline{F}_1$ is the force Q_2 exerts on Q_1. $\underline{F}_2$ is the force Q_1 exerts on Q_2. Which statement is true?.
   - **a.** $\underline{F}_1 = -3\underline{F}_2$
   - **b.** $3\underline{F}_1 = -\underline{F}_2$
   - **c.** $\underline{F}_1 = -\underline{F}_2$
   - **d.** $\underline{F}_1 = 12\underline{F}_2$

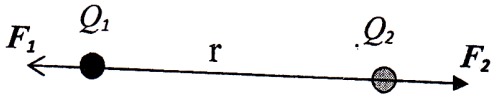

2. The resistance between points A and B is :
   - **a.** ٢١ Ω
   - **b.** ١٢ Ω
   - **c.** ٢ Ω
   - **d.** ١9 Ω

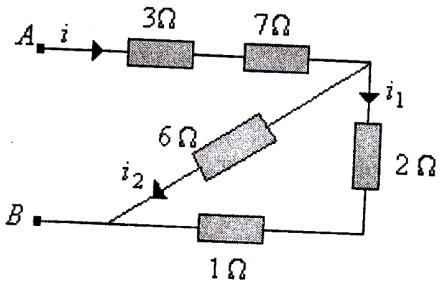

4. If the work required to move a charge q= + 0.50 C from point A to point B is W = + 125 J, then the potential difference between the two points is:
   - **a.** Zero V
   - **b.** 62.5 V
   - **c.** 31.25 V
   - **d.** 250 V

5. What is the potential at the center of the square shown in figure shown below. Assume that $q_1 = +1\times10^{-8}$C, $q_2 = -2\times10^{-8}$C, $q_3 = +3\times10^{-8}$C, $q_4 = +2\times10^{-8}$C, and a =1m.

a. 500V

b. 1014V

c. 255V

d. 360V

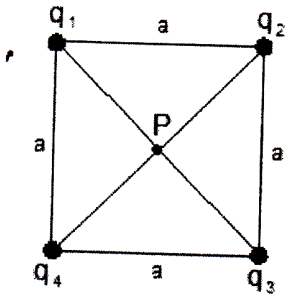

6. A positive point charge + q is placed at the center of a neutral conducting spherical shell. The outer surface is then grounded as shown. A is the inner surface and B is the outer surface. Which statement is correct?

a. The charge on A is - q; that on B is + q.
b. The charge on B is - q; that on A is + q.
c. There is no charge on either A or B.
d. The charge on A is – q; there is no charge on B.

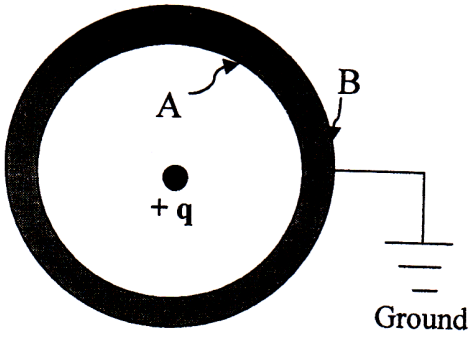

7. For the combination shown, If $C = 50\ \mu F$ and $\Delta V_{AB} = 10V$, the equivalent capacitance (C_{eq}) is:

a. 28.6 μF

b. 42.9 μF

c. 187.5 μF

d. 40 μF

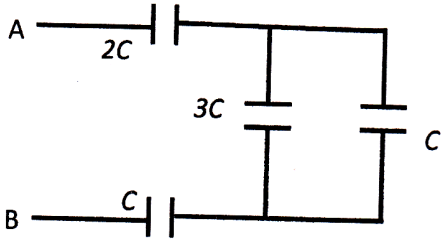

8. In the figure below, the electric current i_2 through the resistance R_2 is:

a. 0.3 A

b. 0.5 A

c. 1 A

d. 1.5 A

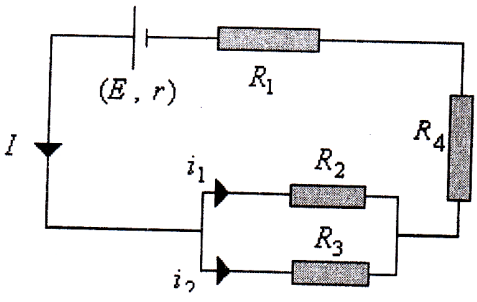

$E = 3.1V,\ r = 0.2\Omega,$
$R_1 = 2\Omega, R_2 = 3\Omega$
$R_3 = 6\Omega,\ R_4 = 2\Omega$

9. If an electron moves with linear speed $4.7\times10^{6}\ \text{m/s}$ in a direction perpendicular to a uniform magnetic field $0.35\ \text{T}$, what is the radius of its circular orbit?

a. $7.\ \times10^{-5}\text{m}$ *b.* $13093\ \text{m}$ *c.* $1.22\times10^{-23}\ \text{m}$ *d.* $14.0\times10^{-2}\ \text{m}$

Ma

Part II : Answer Three (3) only of the following questions' (75Marks) :

Q1) **25 Marks**

1- In the figure shown below: what is the **magnitude and direction** of the electric field (**E**) at point P ?

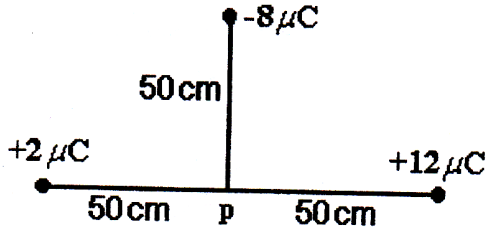

2- In the circuit shown below, find :

a) The current I

b) The potential difference ($V_a - V_c$).

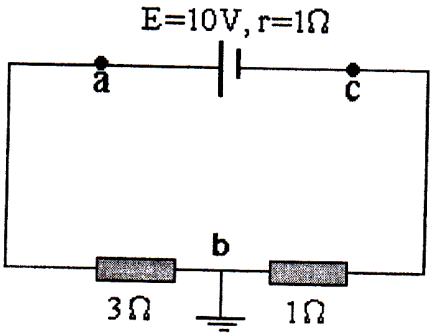

Ma

Q2) 25 Marks

A charged cord ball of mass 1g is suspended on a light string in the presence of a uniform electric field as in figure below. When **E=(3i+5j) x10^5 N/C**, the ball is in equilibrium at $\theta=37^\circ$.

Find: **a)** The charge on the ball

b) The tension in the string.

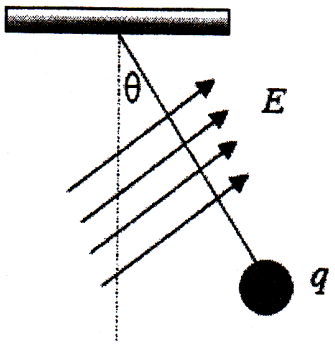

Ma

Q3) **25 Marks**

Two batteries and seven resistors are connected as shown in the figure below. Find the currents i_1, i_2 and i_3 where:

$E_1 = 4\,V,\ E_2 = 24\,V, E_3 = 12V,$

$R_1 = R_2 = 4\Omega,$

$R_3 = R_6 = R_7 = 6\Omega$

$R_4 = R_5 = 2\Omega$

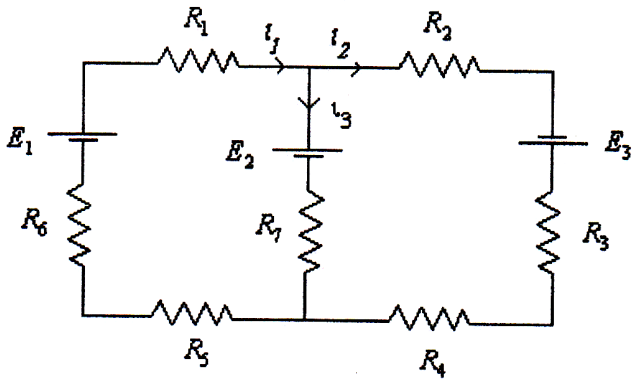

Mar

Q3) **25 Marks**

Two batteries and seven resistors are connected as shown in the figure below. Find the currents i_1, i_2 and i_3 where:

$E_1 = 4\,V,\ E_2 = 24\,V,\ E_3 = 12\,V,$

$R_1 = R_2 = 4\Omega,$

$R_3 = R_6 = R_7 = 6\Omega$

$R_4 = R_5 = 2\Omega$

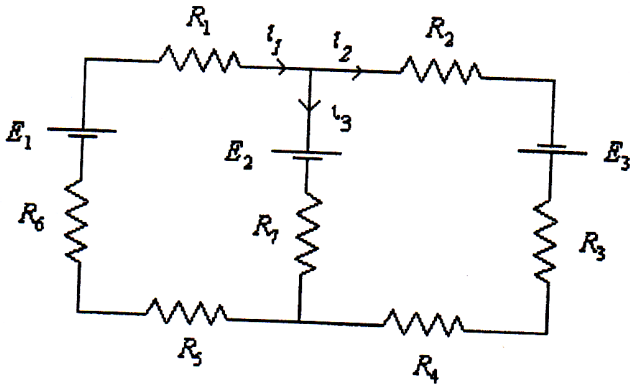

Mark

Q4) 25 Marks

A parallel-plate air capacitor of capacitance of 100 pF has a charge of magnitude 0.1 μC on each plate. The plates are 0.5 mm apart.

a) What is the potential difference between the plates?

b) What is the area of each plate?

c) What is the electric field magnitude between the plates?

d) What is the surface charge density on each plate?.

Good Luck